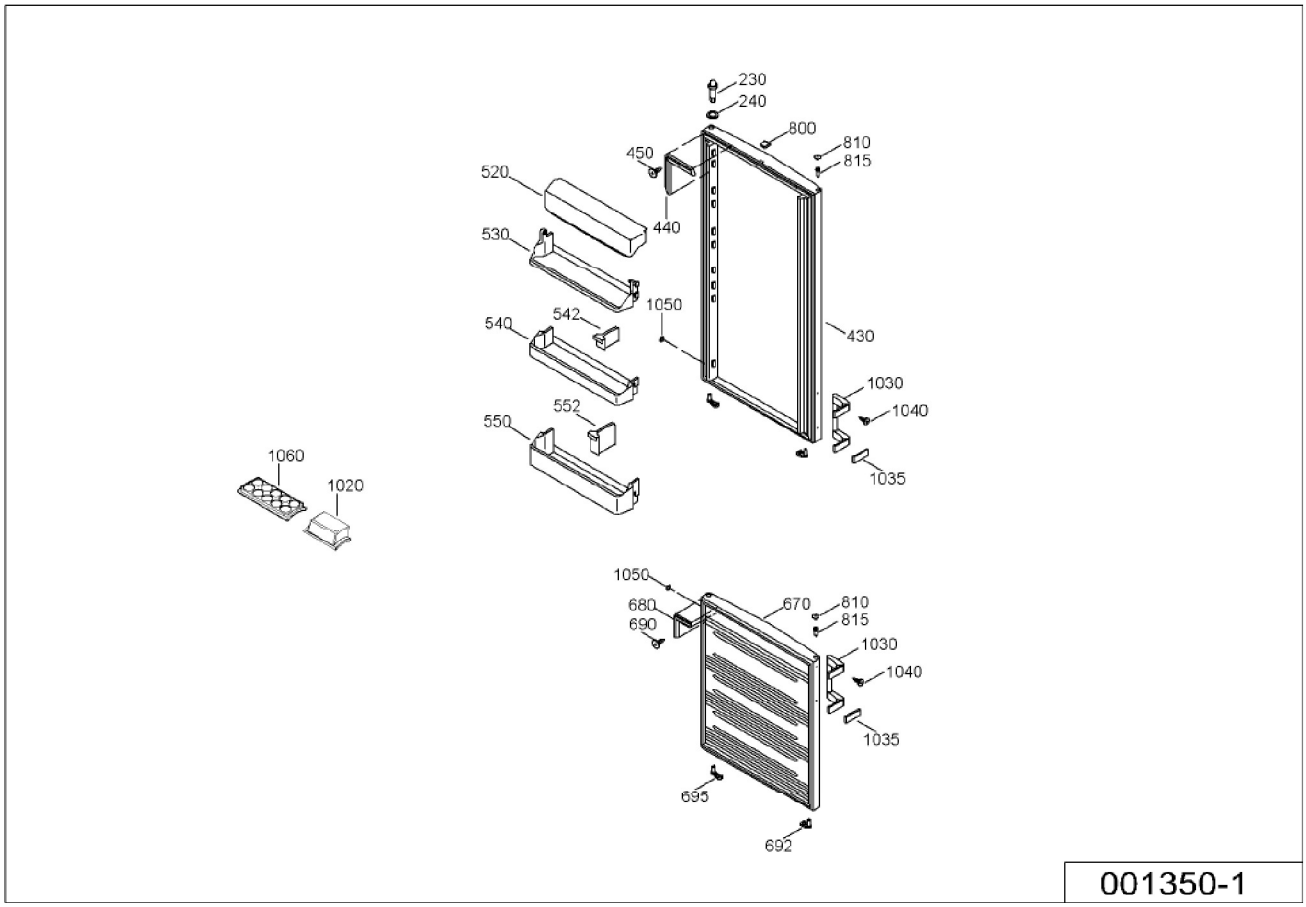Design/036/KGT/KGT 3531-25C/spare parts list