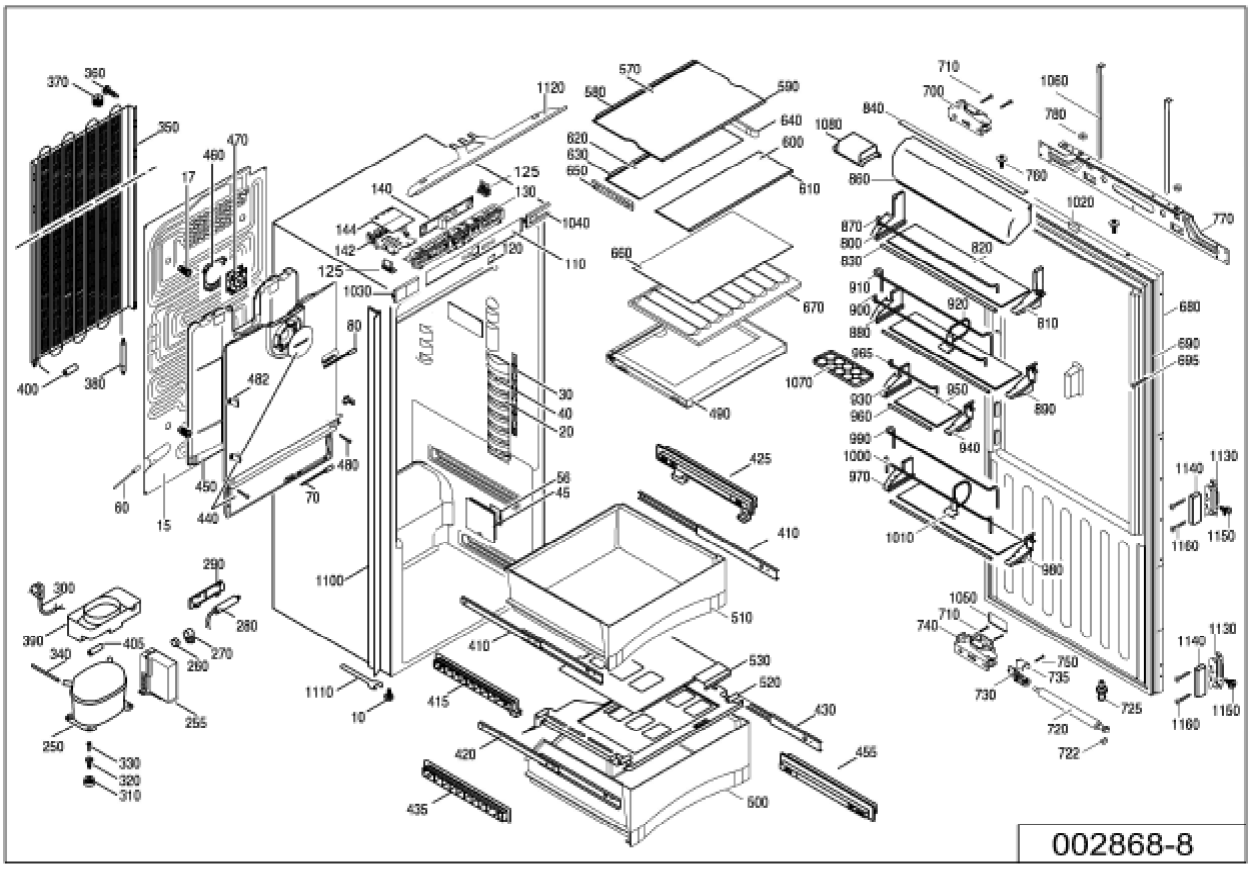Design/001/IKB/IKB 2450-20J/spare parts list